EXTRUDER + MIXER | COUNTER TOP

JEMMA

ARCOBALENO™

MODEL AEX18

CHEFS' FAVORITE

STANDARD FEATURES

- Mixer and extruder– all-in-one process
- Best ROI for your kitchen
- Over 150 dies to choose from
- Includes automatic cutting knife for short pastas
- Industrial, high-torque motor
- Stainless steel hopper
- Removable stainless steel mixer shaft & auger for easy cleaning
- Crumbly dough mixture is extruded through a solid brass die to create over 150 possible pasta shapes
- Portable, compact & versatile machine is easy-to-use
- 110 Volts
- Factory and on-location training. The Only Full-Service Pasta Machine Manufacturer in North America!

OPTIONAL FEATURES & ACCESSORIES

- ☐ Pasta trays - Perforated - Dim: 15.5″W x 23.5″D x 2.75″H
- ☐ Pasta trays - Solid - Dim: 15.5″W x 23.5″D x 2.75″H
- ☐ APC8 Mobile pasta cart with 8 trays
- ☐ APC20 Mobile pasta cart with 20 trays
- ☐ Lasagna sheet die with 6.25″ dough sheet width and Adjustable Thickness: 1/32″ - 3/16″
- ☐ Rolling pin for lasagna sheet die
- ☐ Extruder dies with Teflon inserts

CUTTING KNIFE FOR SHORT PASTAS

LASAGNA SHEET DIE (#60s)

Optional
APC8 Pasta Cart

©2020 Arcobaleno™, LLC

CAD file available. Please contact factory 717-394-1402.

160 GREENFIELD ROAD | LANCASTER, PA 17601
ARCOBALENOLLC.COM | 717.394.1402
@ARCOBALENOPASTA

EXTRUDER & MIXER | COUNTER TOP
MODEL AEX18

ARCOBALENO™

TECHNICAL SPECIFICATIONS

Model	AEX18
Hourly Production*	Up to 15-20 lbs/hr *Production varies by pasta shape
Mixer Capacity (flour)	2,000 g
Electrical Power	110V 60Hz 0.5HP (6 Amps)
Nema Plug	5-15
Cord Length	5 ft
Machine Dimensions	11″W x 30.75″D x 15″H (with knife)
Shipping Dimensions	14.50″W x 28.5″D x 23″H
Machine Weight	75 lbs
Shipping Weight	95 lbs
Shipping Class	85

PAYS FOR ITSELF IN 30 DAYS!

AEX18 ROI BREAKDOWN

Semolina Flour Cost

50 LB BAG OF SEMOLINA FLOUR = $25

80 LBS
YIELDS 80 LBS OF FRESH PASTA

MAKES 160 - 8 OZ SERVINGS

ONLY **$0.16** PER 8 oz SERVING!

AEX18 Production

AEX18 PRODUCES 5.5 LBS (88 OZ) PER BATCH

MAKES 11 8 OZ SERVINGS PER BATCH

Pay Off - 30 Days

$12-15
AVERAGE COST OF 8 OZ PASTA DISH

18
18 PASTA DISHES SOLD PER DAY = $216-270

ROI calculations are examples for illustrative purposes only and actual costs may vary therefore; Arcobaleno, LLC cannot promise or guarantee the ROI benefits.

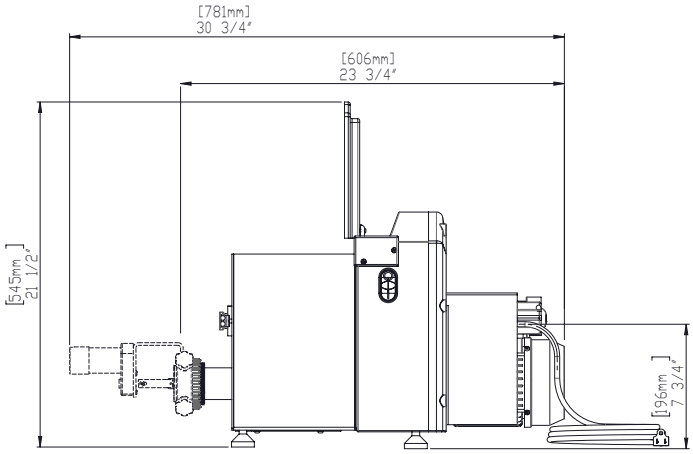

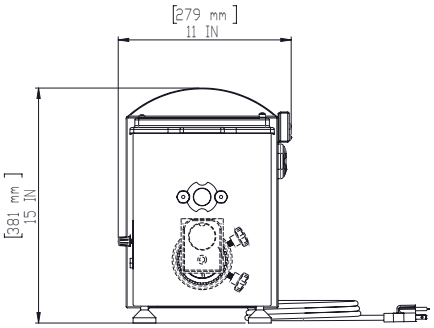

SEMOLINA FLOUR RECIPE FOR AEX18

70 – 71 oz of Semolina flour (2,000 grams)
21 – 22 oz of Water (600 grams)
Note: This may vary upon kitchen humidity & environment. Please adjust accordingly.

EGG PASTA RECIPE FOR AEX18

70 – 71 oz of Semolina flour
6 Whole Large Eggs = 10.5 oz*
12.5 oz of Water

Eggs + Water must be whisked together before adding to the flour.

**Note: 1 Large Egg = 1.75 - 1.8 oz*
This may vary upon egg size. Please adjust accordingly.

DIRECTIONS FOR SEMOLINA FLOUR + WATER:
Put semolina flour in the hopper and press mix. Drizzle 20 oz of water into the hopper while mixing. Mix for 3-5 minutes. Check the consistency after 3 minutes; it should begin to resemble a course streusel. Grab a handful of dough and open your palm. If you see any dry flour, drizzle the remaining liquid (2 oz) while in mix mode for 30 seconds — then begin to extrude.

RECIPE!

ARCOBALENOLLC.COM | 717.394.1402

EXTRUDED PASTA SHAPES
FOR MODELS AEX18 JEMMA

new = New Dies = Favorite Dies

SPAGHETTI

#5	1.1mm
#6	1.3mm
#7	1.5mm
#8	1.7mm
#9	1.9mm
#10	2.1mm
#11	2.3mm
#12	2.5mm

BIGOLI

#13	3mm
#14	3.5mm
#15	4mm

LINGUINE

#21	3 x 1.6mm
#21A	3.5 x 1.6mm
#22	4 x 1.6mm

SPAGHETTI/ALLA CHITARRA/ TONARELLI

#23	1.5mm
#24	2mm
#26	2.5mm
#27	3mm

TAGLIATELLE

#31	2.5mm
#32	3.5mm
#33	4.5mm
#34	6mm

FETTUCCINE

#35	8mm
#36	10mm

EXTRUDED PASTA SHAPES
FOR MODELS AEX18 JEMMA

PAPPARDELLE

#37 12mm

#38 15mm

#38/02 17 mm new

#39 20mm

#40 25mm (1 inch)

#263 22mm
Sagnarelli (with ridges)

MAFALDE

#51 12 mm new

#52 17 mm new

#54 10 mm new

#55 12 mm

#56 16 mm

#57 20 mm

ARCOBALENO™
PASTA EQUIPMENT

MM to INCHES Conversion Chart

Dime =
17mm (11/16")

Penny =
19mm (3/4")

Nickel =
21mm (7/8")

Quarter =
24mm (15/16")

MM	Approx. Size in Inches
1mm	1/32"
2mm	1/26"
3mm	3/32"
4mm	1/8"
5mm	3/6"
6mm	slightly less than 1/4"
7mm	slightly more than 1/4"
8mm	5/16"
9mm	slightly less than 3/8"
10mm	slightly more than 3/8"
11mm	7/16"
12mm	slightly less than 1/2"
13mm	slightly more than 1/2"
14mm	9/16"
15mm	slightly less than 5/8"
16mm	5/8"
17mm	slightly less than 11/16"
18mm	slightly less than 3/4"
19mm	slightly more than 3/4"
20mm	slightly less than 13/16"
21mm	slightly more than 13/16"
22mm	slightly less than 7/8"
23mm	slightly more than 7/8"
24mm	15/16"
25mm	about 1"
26mm	about 1 1/32"
27mm	about 1 1/16"
28mm	about 1 1/8"
29mm	about 1 5/32"
30mm	about 1 3/16"
31mm	about 1 7/32"
32mm	slightly more than 1 1/4"
33mm	about 1 5/16"
34mm	about 1 1/32"

ARCOBALENOLLC.COM | 717.394.1402

EXTRUDED PASTA SHAPES
FOR MODELS AEX18 JEMMA

new = New Dies = Favorite Dies

BUCATINI/PERCIATELLI

#60 2.5 mm

#61 3 mm

#62 4 mm

#62A 5 mm

#63 6mm

#75 4.8 mm
[with ridges]

#71 6 mm
[2 mm wall thickness]

#72 6.5 mm
[1.4 mm wall thickness]

ZITI/PACCHERI

#64 8 mm

#65 10 mm

#66 12 mm

#67 15 mm

#67/02 17 mm

#68 20 mm

#69 25 mm

#70 25 mm
[1.4 mm wall thickness]

RIGATONI

#73 12 mm

#73/02 13 mm

#73/04 11 mm

#76 6 mm.
[with ridges]

#77 8 mm
[with ridges]

#78 10 mm
[with ridges]

#79 12 mm
[with ridges]

#80 15 mm
[with ridges]

#81 20 mm
[with ridges]

#82 25 mm
[with ridges]

EXTRUDED PASTA SHAPES
FOR MODELS AEX18 JEMMA

RIGATONI

#83 26.5 mm new
[1.4 mm wall thickness]
[with ridges]

#84 23 mm new
[1.3 mm wall thickness]
[with ridges]

#85 10.5 mm new
[1.05 mm wall thickness]
[with ridges]

#86 13.5 mm new
[1.15 mm wall thickness]
[with ridges]

#87 17.5 mm new
[1.2 mm wall thickness]
[with ridges]

ELICOIDALI
Reversed Ridges

#110 6mm
(with ridges)

#112 9.5mm
(with ridges)

GRAMIGNE

#91 3 mm

#92 4 mm

#93 3.8 mm new
[with ridges]

CANESTRI/LUMACHE [SMOOTH]

#94 7.8mm

#95 9.8mm

#96 12.5mm

CANESTRI/LUMACHE [WITH RIDGES]

#99 8.6mm

#100 10.5mm

#101 13.5mm

#102 16mm

ARCOBALENOLLC.COM | 717.394.1402

EXTRUDED PASTA SHAPES
FOR MODELS AEX18 JEMMA

new = New Dies = Favorite Dies

MACARONI [SMOOTH]

#120 3.2 mm

#121 4.2 mm

#122 6 mm

#123 new 7.8 mm

#124 9.8 mm

#125 12.5 mm

#126 15 mm

MACARONI [WITH RIDGES]

#133 10.5 mm

#134 13.5 mm

CRESTE DE GALLO [SMOOTH]

#138 6.2 mm

#139 7.8 mm

#140 9.6 mm

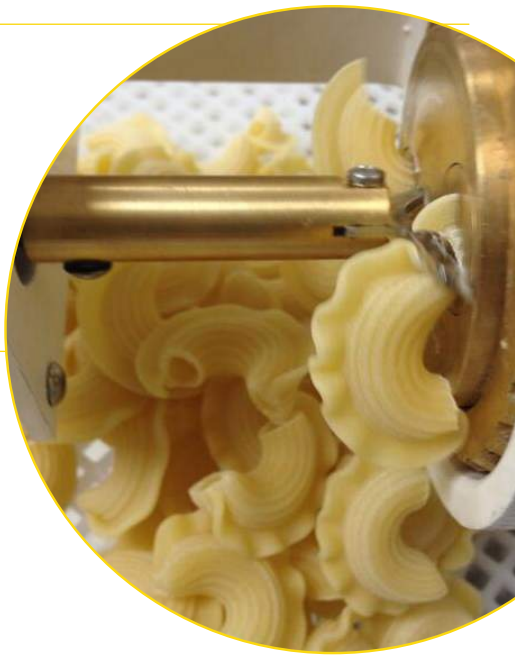

CRESTE DE GALLO [WITH RIDGES]

#143 7 mm

#144 8.6 mm

#145 10 mm

SHELLS [SMOOTH]

#160 15 mm

#161 21 mm new

#162 28 mm

SHELLS [WITH RIDGES]

#170 15 mm new

#171 21 mm

#172 28 mm

EXTRUDED PASTA SHAPES
FOR MODELS AEX18 JEMMA

ORECCHIETTE [SMOOTH]

#181 18 mm

ORECCHIETTE [WITH RIDGES]

#182 18 mm

GNOCCHI SARDI [SMOOTH]

#193 19.5 mm

GNOCCHI SARDI [WITH RIDGES]

#190 12 mm

#191 19 mm

#192 19 mm new

#192/04 19 mm new

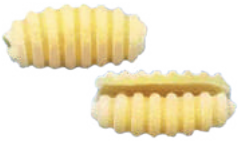

#195 24.5 mm

CLAM SHELLS [SMOOTH]

#208 18 mm

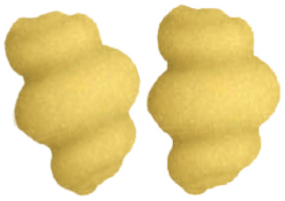

#210 27 mm

CLAM SHELLS [WITH RIDGES]

#209 18 mm

#211 27 mm

#388

ARCOBALENOLLC.COM | 717.394.1402

EXTRUDED PASTA SHAPES
FOR MODELS AEX18 JEMMA

new = New Dies = Favorite Dies

GEMELLI

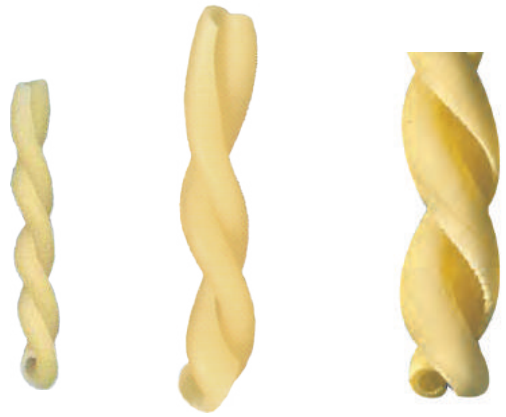

#214 6.4 mm

#215 8.8 mm

#216 new 14.2 mm

CASARECCE

#219 new 7.8 mm

#220 8.8 mm

#221 new 12 mm

#227 new 12 mm

FUSILLI

#222 new 9 mm [4P]

#223 new 9 mm [4P]

#224 new 13 mm [4P]

#225 new 14.2 mm

#230 7 mm [2P]

#231 new 9.8 mm [2P]

#232 12.6 mm [2P]

#233 new 13 mm [2P]

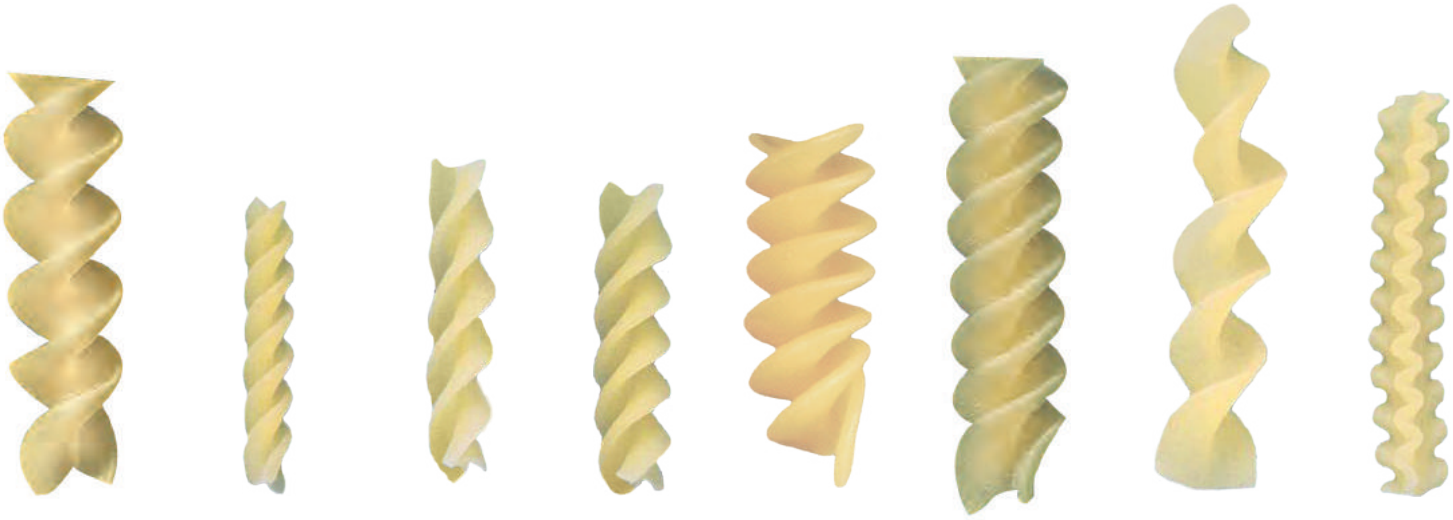

#234 new 15.5 mm [2P]

#239 6.5 mm [3P]

#240 8.4 mm [3P]

#241 10 mm [3P]

#242 new 15.5 mm [2P]

#243 new 13 mm [3P]

#244 12.6 mm [2P]

#246 10.5 mm [3P]

EXTRUDED PASTA SHAPES
FOR MODELS AEX18 JEMMA

SPECIALTY SHAPES

#251 10.4 mm
Trottole

#249 11.4 mm new
Campanelle
[with ridges]

#252 11.4mm
Campanelle

#254 11 mm
Torchietti
(with ridges)

#256 18 mm new

#258 12.5mm
Specialty 3-Loop

#264 11.4mm
Smooth Trene

#386 10mm
Trene
(with ridges)

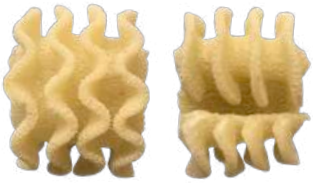

#260 17.5mm
Radiatori

#267 8.3 mm
Garganelli
[with ridges]

#273 6.5 mm new
Torchietto
[with ridges]

#268 6.6mm
Messinesi

#362 10mm
Rustic Torchio
(with ridges)

EXTRUDED PASTA SHAPES
FOR MODELS AEX18 JEMMA

new = New Dies = Favorite Dies

#270 16.5 mm
Rotelle
(Wagon Wheel)

#369
Calamarata

#372 8.8mm
Maccheroncelli

#368 10.5 mm
Casarecce Rigate
[with ridges]

#380
Treccioni

#366 19 mm
Large Rustic
Fusilloni

#454
Fusillone 15 mm

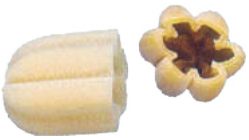

#374
Zucca

#378
Stella

#390
Spaccatelli

#399 8.8mm
Trifoglio

#456
Maccherone Greco

EXTRUDED PASTA SHAPES
FOR MODELS AEX18 JEMMA

LASAGNA SHEET DIE

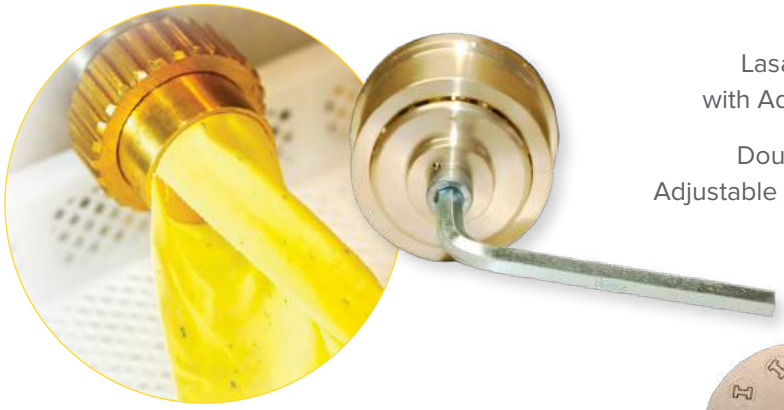

#60s
Lasagna Sheet Die
with Adjustable thickness

Dough Width: 6.25″
Adjustable Thickness: 1/32″ - 3/16″

CUSTOM SHAPES

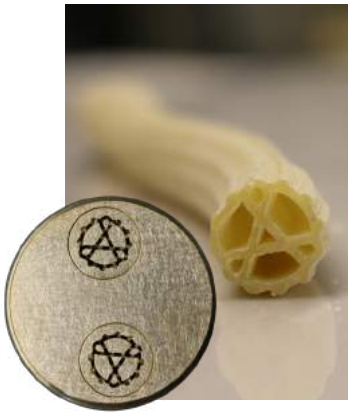

PASTA CARTS

APC8
PASTA ON THE MOVE

CATERINA

APC20
TOWER OF PISA

MARTINA

STANDARD FEATURES

- APC8 ideal for models AEX10, AEX18 & AEX30 (Standard counter top height)
- Removable pasta trays
- NSF approved

TECHNICAL SPECIFICATIONS

Model	APC8	APC20
Trays	8	20
Cart Dimensions	19.5″W x 26.75″D x 36″H	19.5″W x 26.75″D x 71.5″H
Tray Dimensions	15.5″W x 23.5″D x 2.75″H	15.5″W x 23.5″D x 2.75″H
Shipping Dimensions	22″W x 29″D x 40″H	22″W x 29″D x 36″H
Net Weight	48 lbs	80 lbs
Shipping Weight	70 lbs	121 lbs

PASTA DRYER
EXTENDS SHELF LIFE OF PASTA

ASD20 - LAB
ARTISAN SMALL BATCH LAB DRYER

MONICA

STANDARD FEATURES

- Advanced programmable recipe dryer
- Programmable recipes for different shapes and thicknesses

TECHNICAL SPECIFICATIONS

Trays	20
Tray Size	31.50″W x 23.75″D
Pasta Per Tray	4 - 5 lbs
Fresh Capacity	80 - 100 lbs
Dry Capacity	60 - 80 lbs/cycle
Power	230V/3/60Hz, 16 Amps
Machine Dimensions	40″W x 41″D x 67″H
Shipping Dimensions	49″W x 51″D x 75″H
Machine Weight	411 lbs
Shipping Weight	700 lbs

ASD50/75/100/150/200
EXTENDS SHELF LIFE

PICASSO

STANDARD FEATURES

- Advanced programmable recipe dryer
- Fan controls temperature & humidity, so product dries from the inside out

TRAY SIZES:

ASD50S
21.50″W x 23.75″D

ASD50/75/100/150/200
21.50″W x 23.75″D

TECH SPECS	ASD50S	ASD50	ASD75
Trays	50	50	75
Pasta per Tray	4 - 6 lbs	6 - 8 lbs	6 - 8 lbs
Fresh Capacity	300 lbs	400 lbs	660 lbs
Dry Capacity	240 lbs/cycle	320 lbs/cycle	480 lbs/cycle
Power	230V/3/60Hz, 5.5kW	230V/3/60Hz, 6.5kW	230V/3/60Hz, 8.5kW
Machine Dimensions	71″W x 41″D x 87″H	71″W x 55″D x 87″H	98.5″W x 65″D x 87″H
Shipping Dimensions	73″W x 44″D x 91″H	78″W x 65″D x 99″H	103″W x 70″D x 91″H
Machine Weight	710 lbs	1285 lbs	1390 lbs
Shipping Weight	925 lbs	1510 lbs	1650 lbs

TECH SPECS	ASD100	ASD150	ASD200
Trays	100	150	200
Pasta per Tray	6 - 8 lbs	6 - 8 lbs	6 - 8 lbs
Fresh Capacity	800 lbs	1200 lbs	1600 lbs
Dry Capacity	640 lbs/cycle	960 lbs/cycle	1280 lbs/cycle
Power	230V/3/60Hz, 12kW	230V/3/60Hz, 16kW	230V/3/60Hz, 20kW
Machine Dimensions	98.5″W x 102″D x 87″H	98.5″W x 110″D x 87″H	98.5″W x 134″D x 95″H

■ WARRANTY

One Year: For more information visit arcobalenollc.com/warranty.html

1 YEAR WARRANTY PARTS

■ TRY BEFORE YOU BUY

In an effort to ensure success, we maintain a test kitchen where you can have your very own recipe tested for quality — at NO COST to you! Call for details.

TRY BEFORE YOU BUY TO ENSURE SUCCESS

FRESHLY MILLED FLOUR

HOW TO DIFFERENTIATE AND BE A LEADER IN FRESH PASTA MAKING

AFM150

FARM TO TABLE FRESH FLOUR

Make fresh flour right when you need it!

LUNA

STANDARD FEATURES

- Ideal for obtaining fresh flour for pasta, pastries, bread and many others
- Adjustable grinder for regulating the flour granular
- Interchangeable screens for different granularity

TECHNICAL SPECIFICATIONS

Hourly Production	Soft White Wheat 75% extract 1ph - 120 lbs/hr 3ph - 150 lbs/hr
Electrical Power	220/1/60Hz & 220/3/60Hz
Machine Dimensions	16.25″W x 16.50″D x 33.75″H
Shipping Dimensions	24″W x 20″D x 45″H
Machine Weight	140 lbs
Shipping Weight	190 lbs

Fresh Whole Berries from the farm, fresh ground flour with interchange screens for different textures, is filled with delicious flavor, wholesome goodness, and new pastabilities!

Get ready to join the food revolution and discover fresh ground flour. Exceptional flavor-filled flour to make your fresh pasta with outstanding taste and health benefits.

TYPES OF FLOUR

SEMOLINA

Semolina flour is a granular flour with a light yellow color. It is produced fro durum wheat, which is used almost exclusively for making pasta. It is also high in protein and gluten. When using Semolina flour in a extruder, you will be delighted with superior results!

DURUM WHEAT

Durum wheat has the ideal properties form making the best pasta. It is high in protein and gluten, which are both necessary for pasta making.

WHOLE WHEAT

Whole wheat flour is produced from grinding the full wheat berry (kernel). All parts of the wheat berry are used in the flour including the bran, germ and endosperm; which when milled, creates the speckled brown color that is a characteristic of the flour.

GLUTEN FREE

Gluten is the protein present in wheat flour and it can be challenging to bake without it. Some popular gluten free flours are white rice, buckwheat, millet, masa and chickpea flour.

DOUBLE ZERO

In Italy, flour is classified as 1, 0, or 00, according to how finely ground the flour is and how much bran and germ have been removed. 00 is the most highly refined flour and is talcum powder soft, yet holds its protein and nutritional value.

PURPLE BARLEY + EMMERSPELT + FARRO + BUCKWHEAT + RYE + CHICKPEA + RICE FLOUR + MORE!

MEET THE ARCOBALENO EXTRUDER FAMIGLIA!

HOME + NOVICE CHEF

AEX5
HOME MODEL

Up to 5 lbs/hr*

VITA

AEX10
FOR THE NOVICE CHEF

Up to 9–13 lbs/hr*

LOLA

COUNTER TOP

AEX18
CHEF'S FAVORITE

Up to 15–20 lbs/hr*

JEMMA

AEX30
IMPROVING ON THE ORIGINAL

Up to 25–30 lbs/hr*

STELLA

INDUSTRIAL PASTA EXTRUDERS

AEX50
PUSHING BEYOND EXCELLENCE

Up to 50 lbs/hr*

ARIA

AEX90
THE ARTISAN

Up to 90 lbs/hr*

GIA

AEX90M
THE ARTISAN TWO

Up to 110 lbs/hr*

GIA-M

AEX130
IN LOVE WITH PASTA

Up to 130 lbs/hr*

CHIARA

AEX130M
IN LOVE WITH PASTA

Up to 200 lbs/hr*

CHIARA-M

AEX440/440M
FACTORY DUTY

Up to 400 lbs/hr* (AEX440)
Up to 440 lbs/hr* (AEX440M)

DANIELLA-M

**Extruder production varies by pasta shape*

THE ONLY FULL-SERVICE PASTA MACHINE MANUFACTURER IN NORTH AMERICA!

ARCOBALENO LANCASTER HEADQUARTERS
WE LOVE VISITORS!

ARCOBALENO'S ON-LOCATION TEST KITCHEN
COME MAKE PASTA WITH US!

RO_0320

#PastaIsForSharing

ARCOBALENO™
PASTA EQUIPMENT

Specifications subject to change without notice. ©2020 Arcobaleno, LLC

160 GREENFIELD ROAD | LANCASTER, PA 17601
ARCOBALENOLLC.COM | 717.394.1402

@ARCOBALENOPASTA