STELLA

ARCOBALENO™
PASTA EQUIPMENT

AEX30

IMPROVING ON THE ORIGINAL

c UL us LISTED
PASTA EXTRUDER
E497435

CLASSIFIED UL EPH
PASTA EXTRUDER
NSF/ANSI 8
E497436

STANDARD FEATURES

- Automatically mixes and extrudes all-in-one
- Over 100 dies to choose from
- Includes automatic cutting knife for short pastas
- Water cooling feature to help maintain a constant extrusion temperature with digital temperature readout
- Industrial, high-torque motor
- Stainless steel hopper
- Removable auger & stainless steel mixing arm for easy cleaning
- Crumbly dough mixture is extruded through a solid bronze die to create over 100 possible pasta shapes
- Portable, compact & versatile machine is easy-to-use
- Factory and on-location training—the only full–service pasta machine manufacturer in North America

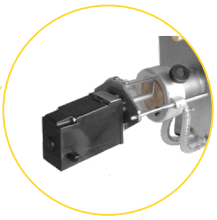

CUTTING KNIFE
FOR SHORT PASTAS

OPTIONAL FEATURES & ACCESSORIES

- ☐ APC-8 Mobile pasta cart with 8 trays
- ☐ APC-20 Mobile pasta cart with 20 trays
- ☐ Extruder dies with Teflon inserts
- ☐ Cooling water tank with recirculating pump & automatic on/off feature
- ☐ Lasagna sheet die with 7″ dough width and Adjustable Thickness: 1/32” - 3/16”
- ☐ Rolling pin for lasagna sheet die
- ☐ Pasta trays - solid and perforated

Optional
APC-8 Pasta Cart

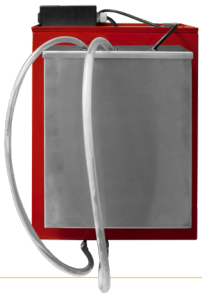

OPTIONAL WATER
COOLING TANK

Water cooling feature attached to back of machine (as shown).

WARRANTY

One Year: For more information visit arcobalenollc.com/warranty.html

1 YEAR WARRANTY PARTS

TRY BEFORE YOU BUY

In an effort to ensure success, we maintain a test kitchen where you can have your very own recipe tested for quality —at NO COST to you! Call for details.

TRY BEFORE YOU BUY
TO ENSURE SUCCESS

ARCOBALENO™
PASTA EQUIPMENT

AEX30
TECHNICAL SPECIFICATIONS

Model	AEX30
Hourly Production	30 lbs/hr
Flour Volume	6 lbs
Mixer Production (flour+liquid)	8 lbs per batch
Electrical Power	110V 60Hz 4 Amps Duel Speed
Nema Plug	5-15
Cord Length	8 ft
Water Connection	1/2" BARB outlet & inlet hose connection. Outlet connects to waste line & inlet connects to water line.
Machine Dimension	15"W x 32.50"D x 19"H
Shipping Dimension	20"W x 36"D x 30"H
Net Weight	135 lbs
Shipping Weight	155 lbs
Shipping Class	85

DID YOU KNOW $$$

50 LB BAG OF SEMOLINA FLOUR = $22
YIELDS 80 LBS OF FRESH PASTA.

THAT'S 160 - 8OZ SERVINGS OF FRESH PASTA!
THAT'S ONLY $0.14 PER 8OZ SERVING

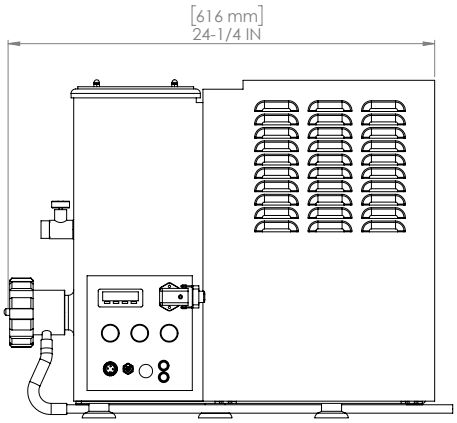

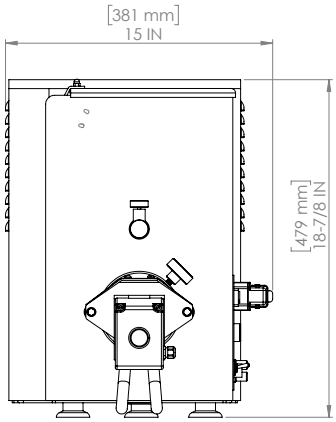

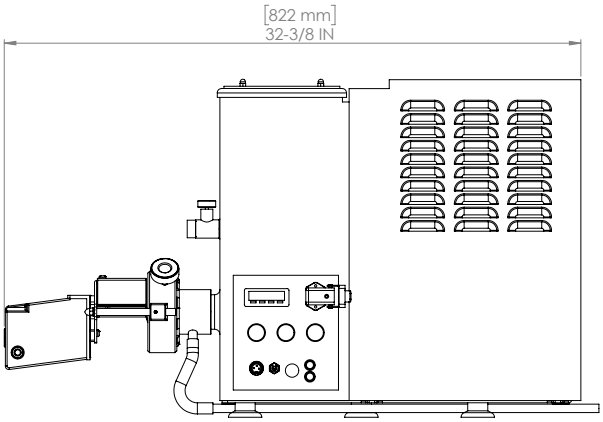

CAD file available. Please contact factory 717-394-1402. | Specifications subject to change without notice | © Copyright 2019 Arcobaleno™, LLC