8.4 ELECTRICAL DIAGRAM

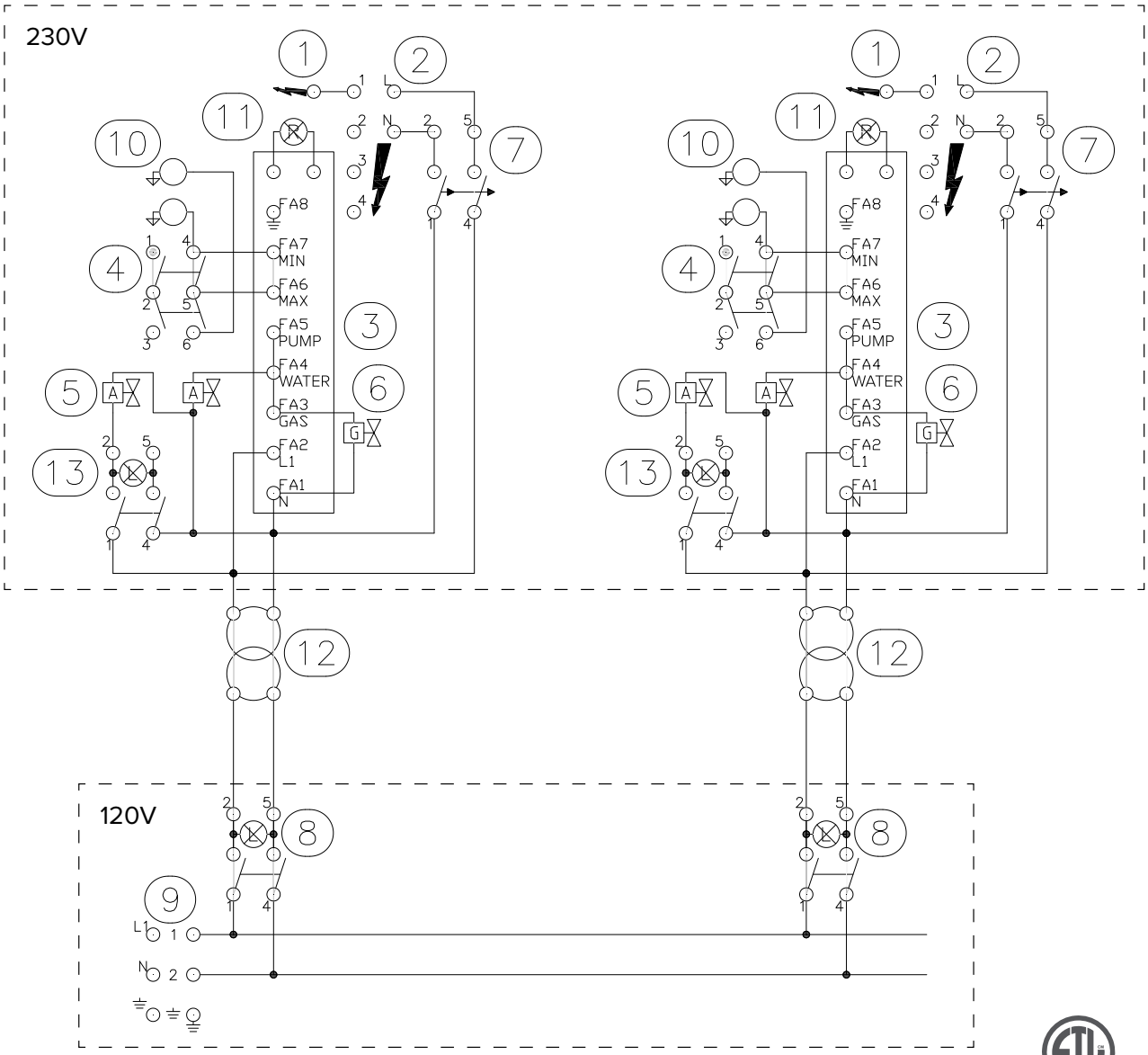

Intertek Intertek
CONFORMS TO UL STD 197; NSF/ANSI STANDARD 4
CERTIFIED TO CSA STD C22.2 #109

AGDHA35

1	Pilot Ceramic Spark Ignitor
2	Ignition Control Box
3	Safety Relay
4	Toggle Switch - Level Selector
5	Water Solenoid Valve

6	Gas Solenoid Valve
7	Toggle Switch - Ignitor
8	Toggle Switch - Power
9	Power Terminal Block
10	Level Probe (Water Sensors)

11	Red Warning Light
12	Step Up Transformer 120V Input 230V Output
13	Toggle Switch - Fill Mode