8.3 PARTS DIAGRAMS

TABLE 1 - REMOVABLE PARTS

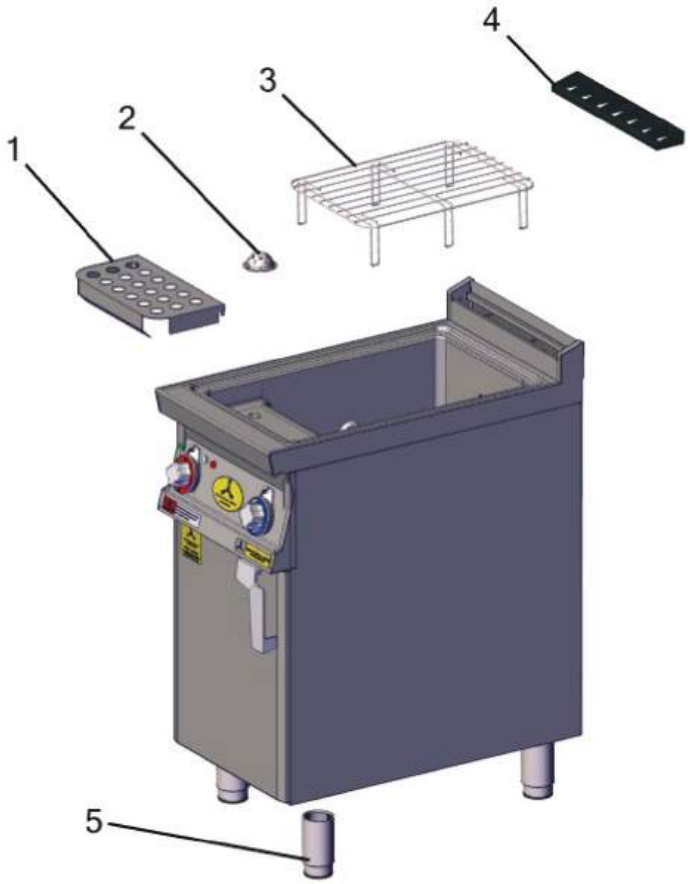

Item No.	Description	Part No.
1	Basket Holder	A544412900
2	Drain Filter	A531042800
3	Wire Basket Grate (28)	A531021501
4	Vent	A532004100
5	Adjustable Foot	A531075200

TABLE 2 - CONTROL PANEL

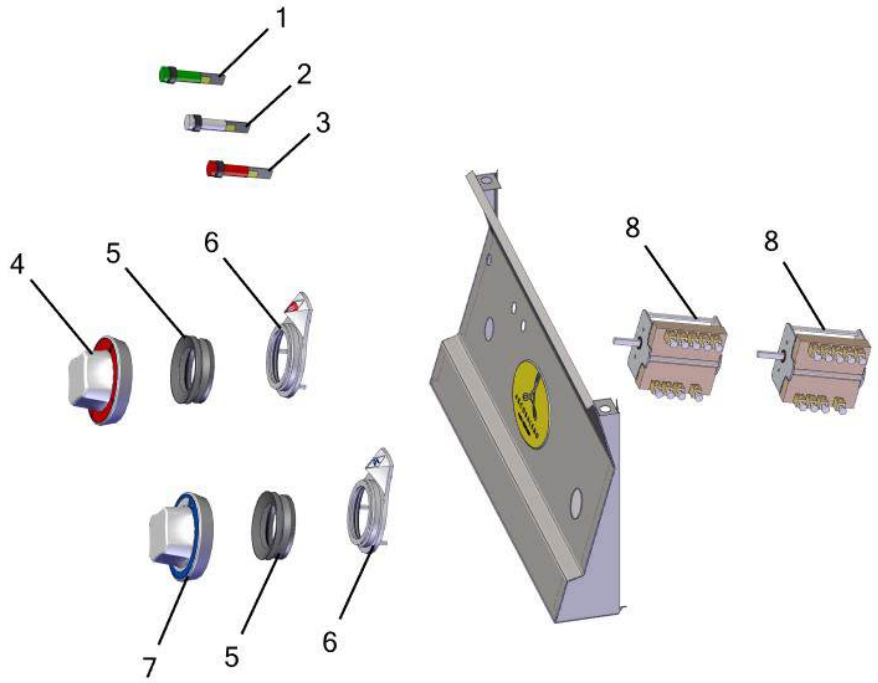

Item No.	Description	Part No.
1	Green Power Light	A537014201
2	Clear Heating Light	A537014101
3	Red Warning Light	A537031901
4	Red Electric Control Knob	A536041700
5	Seal Casing for Knob	A536042100

Item No.	Description	Part No.
6	Knob Ring	A536042300
7	Blue Water Control Knob	A536042000
8	Commutator	A537050300

TABLE 3 - WATER LINE PARTS

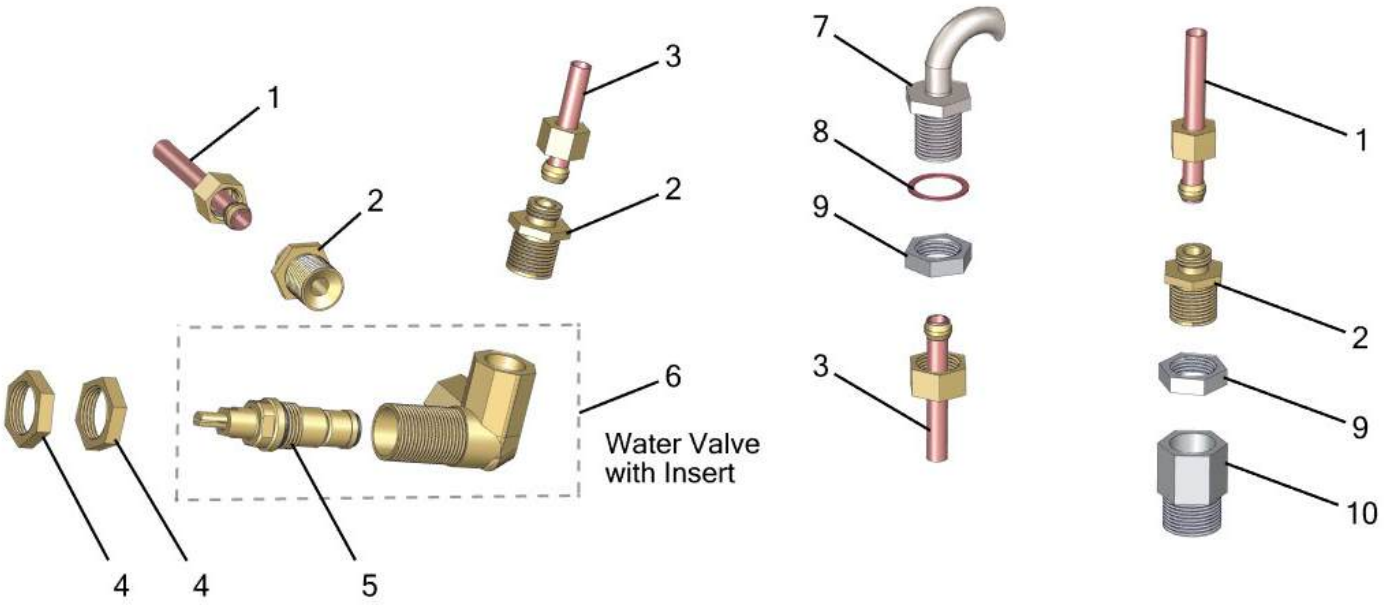

Item No.	Description	Part No.
1	Manual Lower Water Supply Line with Fittings	A533159501
2	Water Line Junction	A533144900
3	Water Spout Line with Fittings	A533095302
4	Water Valve Hex Nut	A533080500
5	Water Control Valve Insert Only	A533136001
6	Water Control Valve with Insert	A531037601
7	Water Spout	A531037500
8	Water Spout Sealing Ring	A533048800
9	Water Line Hex Nut	A533048700
10	Water Line Inlet Fiitting	A533075200

TABLE 4 - ELECTRONICS

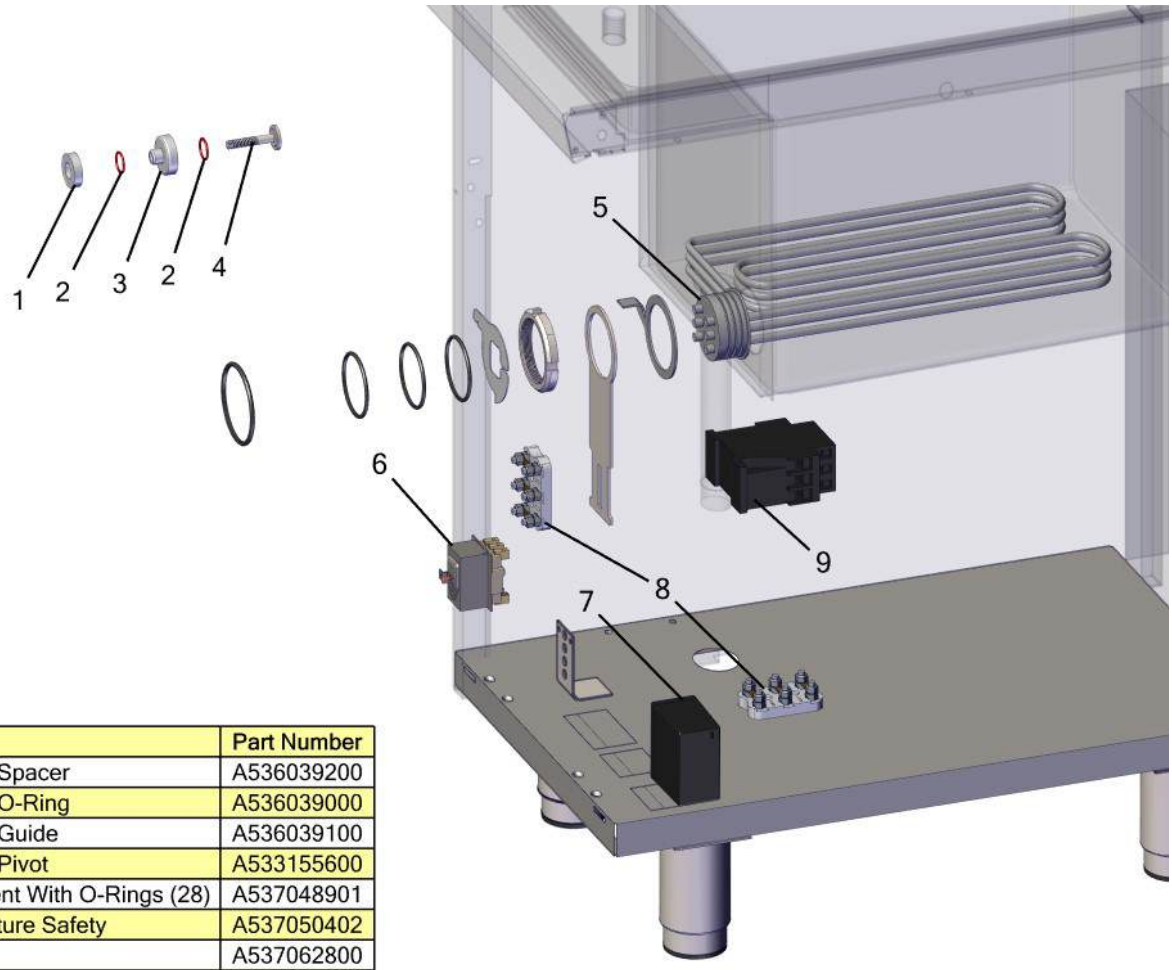

Item No.	Description	Part Number
1	Water Sensor Spacer	A536039200
2	Water Sensor O-Ring	A536039000
3	Water Sensor Guide	A536039100
4	Water Sensor Pivot	A533155600
5	Heating Element With O-Rings (28)	A537048901
6	High Temperature Safety	A537050402
7	Safety Relay	A537062800
8	Terminal Block (White)	A537058401
9	Contactor	A537009501

TABLE 5 - DRAIN PARTS

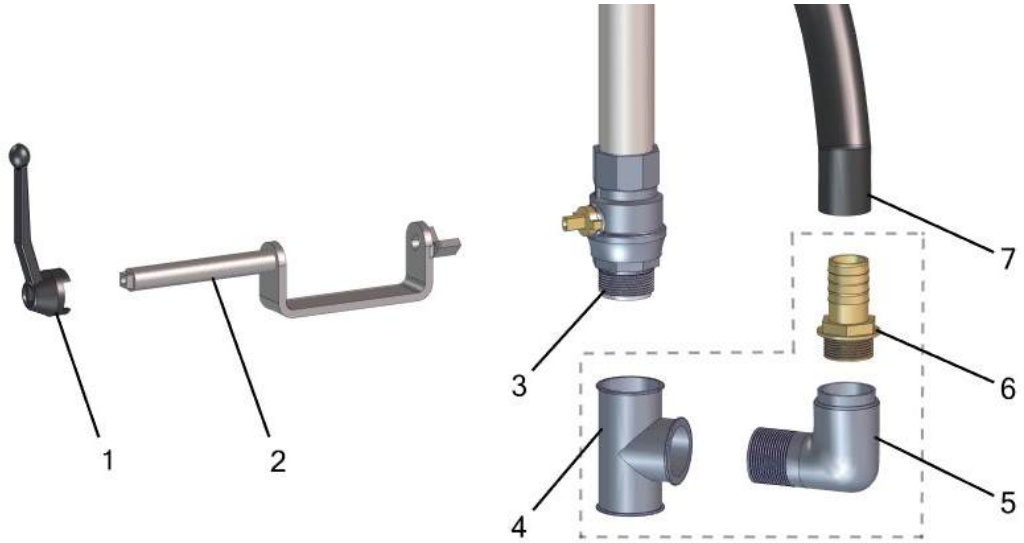

Drain Pipe and Elbow Assembly

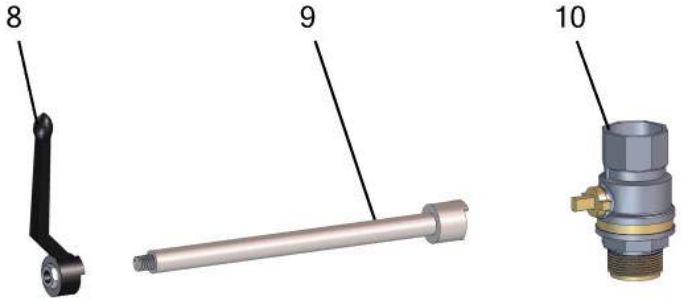

Item No.	Description	Part No.
1	Ball Valve Handle (New Style)	A531044101
2	Handle Extension (New Style)	A533157303
3	Ball Valve (New Style)	A531044001
4	Drain Tee	A533040000
5	Drain Elbow	A533157500
6	Barbed Drain Hose Fitting	A533039900
7	Overflow Drain Hose	A546006100
8	Ball Valve Handle (Old Style)	A531044100
9	Handle Extension (Old Style)	A533157300
10	Ball Valve (Old Style)	A531018600